TCJ Series

Conductive Polymer Solid Electrolytic Chip Capacitors

FEATURES

- Conductive Polymer Electrode
- Lower ESR
- 3x reflow cycles according to J-STD-020
- 100% Surge Current Tested
- CV Range: 0.47-680µF / 2.5-125V
- 17 Case Sizes Available

APPLICATIONS

- Smart Phone, Tablets, Notebook, LCD TV, Power Supplies

Elektra Award 2010

LEAD-FREE

LEAD-FREE COMPATIBLE COMPONENT

RoHS COMPLIANT

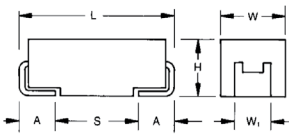

CASE DIMENSIONS:

millimeters (inches)

Code	EIA Code	EIA Metric	L±0.20 (0.008)	W+0.20 (0.008) −0.10 (0.004)	H+0.20 (0.008) −0.10 (0.004)	W_1 ±0.20 (0.008)	A+0.30 (0.012) −0.20 (0.008)	S Min.
A	1206	3216-18	3.20 (0.126)	1.60 (0.063)	1.60 (0.063)	1.20 (0.047)	0.80 (0.031)	1.10 (0.043)
B	1210	3528-21	3.50 (0.138)	2.80 (0.110)	1.90 (0.075)	2.20 (0.087)	0.80 (0.031)	1.40 (0.055)
C	2312	6032-28	6.00 (0.236)	3.20 (0.126)	2.60 (0.102)	2.20 (0.087)	1.30 (0.051)	2.90 (0.114)
D	2917	7343-31	7.30 (0.287)	4.30 (0.169)	2.90 (0.114)	2.40 (0.094)	1.30 (0.051)	4.40 (0.173)
E	2917	7343-43	7.30 (0.287)	4.30 (0.169)	4.10 (0.162)	2.40 (0.094)	1.30 (0.051)	4.40 (0.173)
H	1210	3528-15	3.50 (0.138)	2.80 (0.110)	1.50 (0.059) max	2.20 (0.087)	0.80 (0.031)	1.40 (0.055)
K	1206	3216-10	3.20 (0.126)	1.60 (0.063)	1.00 (0.039) max	1.20 (0.047)	0.80 (0.031)	1.10 (0.043)
N	0805	2012-10	2.05 (0.081)	1.30 (0.051)	1.00 (0.039) max.	1.00 (0.039)	0.50 (0.20)	0.85 (0.033)
P	0805	2012-15	2.05 (0.081)	1.35 (0.053)	1.50 (0.059) max	1.00±0.10 (0.039±0.004)	0.50 (0.020)	0.85 (0.033)
R	0805	2012-12	2.05 (0.081)	1.30 (0.051)	1.20 (0.047) max.	1.00 ± 0.10 (0.039 ± 0.004)	0.50 (0.020)	0.85 (0.033)
S	1206	3216-12	3.20 (0.126)	1.60 (0.063)	1.20 (0.047) max	1.20 (0.047)	0.80 (0.031)	1.10 (0.043)
T	1210	3528-12	3.50 (0.138)	2.80 (0.110)	1.20 (0.047) max	2.20 (0.087)	0.80 (0.031)	1.40 (0.055)
U	2924	7361-43	7.30 (0.287)	6.10 (0.240)	4.10 (0.162)	3.10 (0.122)	1.30 (0.051)	4.40 (0.173)
W	2312	6032-15	6.00 (0.236)	3.20 (0.126)	1.50 (0.059) max	2.20 (0.087)	1.30 (0.051)	2.90 (0.114)
X	2917	7343-15	7.30 (0.287)	4.30 (0.169)	1.50 (0.059) max	2.40 (0.094)	1.30 (0.051)	4.40 (0.173)
Y	2917	7343-20	7.30 (0.287)	4.30 (0.169)	2.00 (0.079) max	2.40 (0.094)	1.30 (0.051)	4.40 (0.173)
5	2917	7343-40	7.30 (0.287)	4.30 (0.169)	3.80 (0.150)	2.40 (0.094)	1.30 (0.051)	4.40 (0.173)

W_1 dimension applies to the termination width for A dimensional area only.

MARKING

A, B, C, D, E, H, K, S, T, U, W, X, Y, 5 CASE

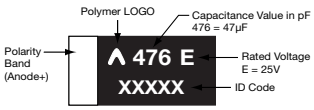

N, P, R CASE

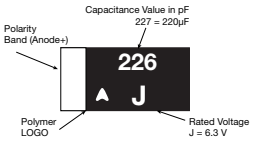

HOW TO ORDER

TCJ	A	226	M	004	R	0300	E
Type	**Case Size** See table above	**Capacitance Code** pF code: 1st two digits represent significant figures, 3rd digit represents multiplier (number of zeros to follow)	**Tolerance** M = ±20%	**Rated DC Voltage** 002 = 2.5Vdc 004 = 4Vdc 006 = 6.3Vdc 010 = 10Vdc 016 = 16Vdc 020 = 20Vdc 025 = 25Vdc 035 = 35Vdc 050 = 50Vdc 063 = 63Vdc 075 = 75Vdc 100 = 100Vdc 125 = 125Vdc	**Packaging** R = Leadfree 7" Reel S = Leadfree 13" Reel	**ESR in mΩ**	**Additional Character** E = Black resin (It is possible to order PN without "E" as identical product)

TECHNICAL SPECIFICATIONS (COMMON FOR ALL TCJ SERIES)

Technical Data:	All technical data relate to an ambient temperature of +25°C
Capacitance Tolerance:	±20%
Leakage Current DCL:	0.1CV
Resistance to soldering heat:	3x reflow cycles according to J-STD-020

NOTE: Conductive Polymer Capacitors are designed to operate within the limits of the environmental conditions specified for each series. If operated continuously at their maximum temperature and / or humidity limit, or beyond these limits, capacitors may exhibit a parametric shift in capacitance and increases in ESR. These changes may occur earlier if the specified environmental conditions are exceeded. Similarly, their normal operational time period will be significantly extended if their general duty cycle includes operation below maximum temperature within humidity controlled environments. Careful attention should be paid to maximum temperature with associated high humidity environments as well as voltage derating, ripple current and current surges. Please reference the KYOCERA AVX Conductive Polymer Capacitor Guidelines for more information or contact factory for application assistance.

The Important Information/Disclaimer is incorporated in the catalog where these specifications came from or available online at www.kyocera-avx.com/disclaimer/ by reference and should be reviewed in full before placing any order.

CAPACITANCE AND RATED VOLTAGE RANGE (LETTER DENOTES CASE SIZE)

Cap		Rated Voltage DC (V_R) to 85°C												
µF	Code	2.5V (e)	4V (G)	6.3V (J)	10V (A)	16V (C)	20V (D)	25V (E)	35V (V)	50V (T)	63V (J)	75V (P)	100V (A)	125V (B)
0.47	474										B(400)			
0.68	684									B(400)	B(300)			
1.0	105							P (500)		B(300)	B(300) C(300)			
1.5	155								B(200)	B(300) C(300)	C(300)			
2.2	225								B(200)	B(300) C(300)	C(200)			
3.3	335								A(500) B(200)	B(300) C(200)	C(200)			D(250)
4.7	475				K(300,500) R(500)			A(500) B(100,150)	B(150,200) C(200)	C(200) X(250) Y(250)	C(200) D(120)	D(150)	D(250)	
6.8	685					A(200)	A(150), B(150)	A(150) B(90,150) T(100,150)	C(200)	C(200) D(120)	D(120) E(100,150)	D(120)		
10	106			A(300), N(200,250,500), R(500)	A(200,300)	A(200) B(100,200) T(100,150,200)	A(150) B(100,150)	A(150) B(90,100,150) T(100)	B(150,200) C(200) Y(70)	D(90,120) E(70,100)	E(100,150)			
15	156		A(300)	A(300)	A(200) B(100,200)	A(250), B(90,150)	B(90,150)	B(100,150) Y(90)	B(200) C(200) D(70,100) Y(70,100)	D(150) E(70,100)	E(150)			
22	226		A(300)	A(300), B(70), K(400) S(400),T(150)	A(250), B(70,300) T(70,150)	A(300) B(70,150)	B(90,150) X(100) Y(70)	B(100,150) C(100) D(60,100) X(100), Y(70)	D(70,100) Y(150)	D(90), E(75), E(150)				
33	336		A(300)	A(200) B(70,200) T(150)	A(250), B(70,200) C(100) T(70,150)	A(200),B(90,150) H(150) Y(45,60,70)	X(100) Y(70)	D(60,100) X(70,100) Y(40,60,70,100)	D(70,100) E(55,70) U(70) Y(100)					
47	476		A(200) T(80)	A(70,100,200) B(55,70) T(55,70,80,120)	B(70) C(100) H(100)	D(45,70), H(150) X(45,70) Y(45,70)	D(55), X(55,70) Y(70)	D(60,100) E(50) Y(100)	E(55) U(70) Y(100)					
68	686	A(250)	A(250) B(70) T(80)	B(55,70) C(55,100), H(100) T(200), W(70)	D(45,55) Y(45,55)	D(50) Y(50)	D(55) E(45) Y(50)	D(70) E(50) Y(100)						
100	107	A(200) B(55,70)	A(200) B(40,70) T(70,150)	A(100,150) B(40,45,55,70) C(70,100) T(200), W(70)	D(18,25,45,55,80) Y(18,25,45,55)	D(50) E(40) Y(50)	C(70) D(55) E(45) Y(55)	D(55,70) E(40,60,80) U(70)						
150	157	B(70)	B(70) D(15) Y(15,25,45)	B(35,45,55,70) D(12,15,25,40) H(70,200),W(70) Y(15,25,40)	D(25,40,45,55) Y(25,40,45,55)	C(70) D(40,50,70) E(25,40) Y(40,50,70)	E(50)	U(70)	U(100)					
220	227	B(35,45,70)	B(35,45,60,70) D(12,15,25,40) Y(15,25,40)	B(70,200) D(12,15,25,35,40,50) H(170) Y(15,18,25,35,40,50)	D(15,25,40,50) Y(15,25,40,50)	D(35,50) E(50)	U(70)							
330	337	B(35,45,70) Y(25,40)	D(15,25,40,50) Y(15,25,40,50)	D(12,15,18,25,40,50) Y(15,25,40,50)	D(25) E(25, 50) 5(35,100)	E(35, 50,70), U(50,70), 5(100)								
470	477	D(12,15,25,40,50) Y(15,25,40,50)	D(12,15,25,40,50) Y(15,25,40,50)	D(25, 45) E(25, 50) X(35,50,100)	E(25, 50)	5(100)								
680	687			E(25, 50)										

Released ratings, (ESR ratings in mOhms in parentheses)
Engineering samples - please contact KYOCERA AVX
Note: Voltage ratings are minimum values. KYOCERA AVX reserves the right to supply higher voltage ratings in the same case size, to the same reliability standards.

RATINGS & PART NUMBER REFERENCE

Part Number	Case Size	Capacitance (µF)	Rated Voltage (V)	Maximum Operating Temperature (°C)	DCL Max. (µA)	DF Max. (%)	ESR Max. @ 100kHz (mΩ)	100kHz RMS Current (mA)				Product Category	MSL
								45°C	85°C	105°C	125°C		
2.5 Volt													
TCJA686M002#0250E	A	68	2.5	105	17	6	250	600	400	300	–	3	3
TCJA107M002#0200E	A	100	2.5	105	25	6	200	700	500	300	–	3	3
TCJB107M002#0055E	B	100	2.5	125	25	6	55	1500	1100	700	400	0	3
TCJB107M002#0070E	B	100	2.5	125	25	6	70	1300	900	600	300	1	3
TCJB157M002#0070E	B	150	2.5	105	37.5	6	70	1300	900	600	–	3	3
TCJB227M002#0035E	B	220	2.5	105	55	8	35	1900	1300	900	–	3	3
TCJB227M002#0045E	B	220	2.5	105	55	8	45	1700	1200	800	–	3	3
TCJB227M002#0070E	B	220	2.5	105	55	8	70	1300	900	600	–	3	3
TCJB337M002#0035E	B	330	2.5	105	82.5	8	35	1900	1300	900	–	3	3
TCJB337M002#0045E	B	330	2.5	105	82.5	8	45	1700	1200	800	–	3	3
TCJB337M002#0070E	B	330	2.5	105	82.5	8	70	1300	900	600	–	3	3
TCJY337M002#0025E	Y	330	2.5	105	82.5	6	25	2700	1900	1200	–	2	3
TCJY337M002#0040E	Y	330	2.5	105	82.5	6	40	2200	1500	1000	–	3	3
TCJD477M002#0012E	D	470	2.5	105	117.5	6	12	4300	3000	1900	–	2	3
TCJD477M002#0015E	D	470	2.5	105	117.5	6	15	3900	2700	1800	–	2	3
TCJD477M002#0025E	D	470	2.5	105	117.5	6	25	3000	2100	1400	–	2	3
TCJD477M002#0040E	D	470	2.5	105	117.5	6	40	2400	1700	1100	–	3	3
TCJD477M002#0050E	D	470	2.5	105	117.5	6	50	2100	1500	900	–	3	3
TCJY477M002#0015E	Y	470	2.5	85	117.5	6	15	3500	2500	–	–	5	3
TCJY477M002#0025E	Y	470	2.5	105	117.5	6	25	2700	1900	1200	–	3	3
TCJY477M002#0040E	Y	470	2.5	105	117.5	6	40	2200	1500	1000	–	3	3
TCJY477M002#0050E	Y	470	2.5	105	117.5	6	50	1900	1300	900	–	3	3
4 Volt													
TCJA156M004#0300E	A	15	4	125	6	6	300	600	400	300	200	1	3
TCJA226M004#0300E	A	22	4	125	8.8	6	300	600	400	300	200	1	3
TCJA336M004#0300E	A	33	4	125	13.2	6	300	600	400	300	200	1	3
TCJA476M004#0200E	A	47	4	105	18.8	6	200	700	500	300	–	3	3
TCJT476M004#0080E	T	47	4	105	18.8	8	80	1100	800	500	–	3	3
TCJA686M004#0250E	A	68	4	105	27.2	6	250	600	400	300	–	3	3
TCJB686M004#0070E	B	68	4	125	27.2	6	70	1300	900	600	300	1	3
TCJT686M004#0080E	T	68	4	105	27.2	8	80	1100	800	500	–	3	3
TCJA107M004#0200E	A	100	4	105	40	6	200	700	500	300	–	3	3
TCJB107M004#0040E	B	100	4	105	40	8	40	1800	1300	800	–	3	3
TCJB107M004#0070E	B	100	4	125	40	8	70	1300	900	600	300	0	3
TCJT107M004#0070E	T	100	4	105	40	8	70	1200	800	500	–	3	3
TCJT107M004#0150E	T	100	4	105	40	8	150	800	600	400	–	3	3
TCJB157M004#0070E	B	150	4	105	60	6	70	1300	900	600	–	3	3
TCJD157M004#0015E	D	150	4	105	60	6	15	3900	2700	1800	–	2	3
TCJY157M004#0015E	Y	150	4	105	60	6	15	3500	2500	1600	–	2	3
TCJY157M004#0025E	Y	150	4	105	60	6	25	2700	1900	1200	–	2	3
TCJY157M004#0045E	Y	150	4	105	60	6	45	2000	1400	900	–	3	3
TCJB227M004#0035E	B	220	4	105	88	10	35	1900	1300	900	–	3	3
TCJB227M004#0045E	B	220	4	105	88	10	45	1700	1200	800	–	3	3
TCJB227M004#0060E	B	220	4	105	88	10	60	1400	1000	600	–	3	3
TCJB227M004#0070E	B	220	4	105	88	10	70	1300	900	600	–	3	3
TCJD227M004#0012E	D	220	4	105	88	6	12	4300	3000	1900	–	2	3
TCJD227M004#0015E	D	220	4	105	88	6	15	3900	2700	1800	–	2	3
TCJD227M004#0025E	D	220	4	105	88	6	25	3000	2100	1400	–	2	3
TCJD227M004#0040E	D	220	4	105	88	6	40	2400	1700	1100	–	2	3
TCJY227M004#0015E	Y	220	4	105	88	6	15	3500	2500	1600	–	2	3
TCJY227M004#0025E	Y	220	4	105	88	6	25	2700	1900	1200	–	2	3
TCJY227M004#0040E	Y	220	4	105	88	6	40	2200	1500	1000	–	3	3
TCJD337M004#0015E	D	330	4	105	132	6	15	3900	2700	1800	–	2	3
TCJD337M004#0025E	D	330	4	105	132	6	25	3000	2100	1400	–	2	3
TCJD337M004#0040E	D	330	4	105	132	6	40	2400	1700	1100	–	3	3
TCJD337M004#0050E	D	330	4	105	132	6	50	2100	1500	900	–	3	3
TCJY337M004#0015E	Y	330	4	85	132	6	15	3500	2500	–	–	5	3
TCJY337M004#0025E	Y	330	4	105	132	6	25	2700	1900	1200	–	3	3
TCJY337M004#0040E	Y	330	4	105	132	6	40	2200	1500	1000	–	3	3
TCJY337M004#0050E	Y	330	4	105	132	6	50	1900	1300	900	–	3	3
TCJD477M004#0012E	D	470	4	105	188	6	12	4300	3000	1900	–	2	3
TCJD477M004#0015E	D	470	4	105	188	6	15	3900	2700	1800	–	2	3
TCJD477M004#0025E	D	470	4	105	188	6	25	3000	2100	1400	–	2	3
TCJD477M004#0040E	D	470	4	105	188	6	40	2400	1700	1100	–	2	3
TCJD477M004#0050E	D	470	4	105	188	6	50	2100	1500	900	–	2	3
TCJY477M004#0015E	Y	470	4	85	188	6	15	3500	2500	–	–	5	3
TCJY477M004#0025E	Y	470	4	105	188	6	25	2700	1900	1200	–	3	3
TCJY477M004#0040E	Y	470	4	105	188	6	40	2200	1500	1000	–	3	3
TCJY477M004#0050E	Y	470	4	105	188	6	50	1900	1300	900	–	3	3
6.3 Volt													
TCJA106M006#0300E	A	10	6.3	125	6	6	300	600	400	300	200	1	3
TCJN106M006#0200E	N	10	6.3	125	6	6	200	200	600	300	–	3	3
TCJN106M006#0250E	N	10	6.3	125	6	6	250	250	600	300	–	3	3
TCJN106M006#0500E	N	10	6.3	125	6	6	500	500	400	200	–	3	3
TCJR106M006#0500E	R	10	6.3	125	6	6	500	500	400	200	–	3	3
TCJA156M006#0300E	A	15	6.3	125	9	6	300	600	400	300	200	1	3
TCJA226M006#0300E	A	22	6.3	125	13.2	6	300	600	400	300	200	1	3
TCJB226M006#0070E	B	22	6.3	125	13.2	6	70	1300	900	600	300	0	3
TCJK226M006#0400E	K	22	6.3	105	13.2	8	400	500	400	200	–	3	3
TCJS226M006#0400E	S	22	6.3	105	13.2	8	400	500	400	200	–	3	3
TCJT226M006#0150E	T	22	6.3	105	13.2	6	150	800	600	400	–	3	3

The Important Information/Disclaimer is incorporated in the catalog where these specifications came from or available online at www.kyocera-avx.com/disclaimer/ by reference and should be reviewed in full before placing any order.

RATINGS & PART NUMBER REFERENCE

Part Number	Case Size	Capacitance (µF)	Rated Voltage (V)	Maximum Operating Temperature (°C)	DCL Max. (µA)	DF Max. (%)	ESR Max. @ 100kHz (mΩ)	100kHz RMS Current (mA)				Product Category	MSL
								45°C	85°C	105°C	125°C		
TCJA336M006#0200E	A	33	6.3	105	19.8	6	200	700	500	300	–	3	3
TCJB336M006#0070E	B	33	6.3	125	19.8	6	70	1300	900	600	300	0	3
TCJB336M006#0200E	B	33	6.3	125	19.8	6	200	800	600	400	200	0	3
TCJT336M006#0150E	T	33	6.3	105	19.8	8	150	800	600	400	–	3	3
TCJA476M006#0070E	A	47	6.3	105	28.2	6	70	1200	800	500	–	3	3
TCJA476M006#0100E	A	47	6.3	105	28.2	6	100	1000	700	500	–	3	3
TCJA476M006#0200E	A	47	6.3	105	28.2	6	200	700	500	300	–	3	3
TCJB476M006#0055E	B	47	6.3	105	28.2	6	55	1500	1100	700	–	2	3
TCJB476M006#0070E	B	47	6.3	125	28.2	6	70	1300	900	600	300	0	3
TCJT476M006#0055E	T	47	6.3	105	28.2	8	55	1300	900	600	–	3	3
TCJT476M006#0070E	T	47	6.3	105	28.2	8	70	1200	800	500	–	3	3
TCJT476M006#0080E	T	47	6.3	105	28.2	8	80	1100	800	500	–	3	3
TCJT476M006#0120E	T	47	6.3	105	28.2	8	120	900	600	400	–	3	3
TCJB686M006#0055E	B	68	6.3	125	40.8	8	55	1500	1100	700	400	1	3
TCJB686M006#0070E	B	68	6.3	125	40.8	8	70	1300	900	600	300	0	3
TCJC686M006#0055E	C	68	6.3	125	40.8	6	55	1800	1300	800	500	1	3
TCJC686M006#0100E	C	68	6.3	125	40.8	6	100	1300	900	600	300	1	3
TCJH686M006#0100E	H	68	6.3	105	40.8	6	100	1000	700	500	–	3	3
TCJT686M006#0200E	T	68	6.3	105	40.8	8	200	700	500	300	–	3	3
TCJW686M006#0070E	W	68	6.3	125	40.8	8	70	1400	1000	600	400	1	3
TCJA107M006#0100E	A	100	6.3	105	60	10	100	1000	700	500	–	3	3
TCJA107M006#0150E	A	100	6.3	105	60	10	150	800	600	400	–	3	3
TCJB107M006#0040E	B	100	6.3	105	60	10	40	1800	1300	800	–	3	3
TCJB107M006#0045E	B	100	6.3	105	60	10	45	1700	1200	800	–	3	3
TCJB107M006#0055E	B	100	6.3	105	60	10	55	1500	1100	700	–	3	3
TCJB107M006#0070E	B	100	6.3	105	60	10	70	1300	900	600	–	3	3
TCJC107M006#0070E	C	100	6.3	105	60	6	70	1600	1100	700	–	3	3
TCJC107M006#0100E	C	100	6.3	105	60	6	100	1300	900	600	–	3	3
TCJT107M006#0200E	T	100	6.3	105	60	10	200	700	500	300	–	3	3
TCJW107M006#0070E	W	100	6.3	105	60	6	70	1400	1000	600	–	3	3
TCJB157M006#0035E	B	150	6.3	105	90	10	35	1900	1300	900	–	3	3
TCJB157M006#0045E	B	150	6.3	105	90	10	45	1700	1200	800	–	3	3
TCJB157M006#0055E	B	150	6.3	105	90	10	55	1500	1100	700	–	3	3
TCJB157M006#0070E	B	150	6.3	105	90	10	70	1300	900	600	–	3	3
TCJD157M006#0012E	D	150	6.3	105	90	6	12	4300	3000	1900	–	2	3
TCJD157M006#0015E	D	150	6.3	105	90	6	15	3900	2700	1800	–	2	3
TCJD157M006#0025E	D	150	6.3	105	90	6	25	3000	2100	1400	–	2	3
TCJD157M006#0040E	D	150	6.3	105	90	6	40	2400	1700	1100	–	2	3
TCJH157M006#0070E	H	150	6.3	105	90	6	70	1200	800	500	-	3	3
TCJH157M006#0200E	H	150	6.3	105	90	6	200	700	500	300	–	3	3
TCJW157M006#0070E	W	150	6.3	105	90	6	70	1400	1000	600	–	3	3
TCJY157M006#0015E	Y	150	6.3	105	90	6	15	3500	2500	1600	–	2	3
TCJY157M006#0025E	Y	150	6.3	105	90	6	25	2700	1900	1200	–	2	3
TCJY157M006#0040E	Y	150	6.3	105	90	6	40	2200	1500	1000	–	3	3
TCJB227M006#0070E	B	220	6.3	105	132	10	70	1300	900	600	–	3	3
TCJB227M006#0200E	B	220	6.3	105	132	10	200	800	600	400	–	3	3
TCJD227M006#0012E	D	220	6.3	105	132	6	12	4300	3000	1900	–	2	3
TCJD227M006#0015E	D	220	6.3	105	132	6	15	3900	2700	1800	–	2	3
TCJD227M006#0025E	D	220	6.3	105	132	6	25	3000	2100	1400	–	2	3
TCJD227M006#0035E	D	220	6.3	105	132	6	35	2500	1800	1100	–	3	3
TCJD227M006#0040E	D	220	6.3	105	132	6	40	2400	1700	1100	–	3	3
TCJD227M006#0050E	D	220	6.3	105	132	6	50	2100	1500	900	–	3	3
TCJH227M006#0170E	H	220	6.3	105	132	10	170	800	600	400	–	3	3
TCJY227M006#0015E	Y	220	6.3	85	132	6	15	3500	2500	–	–	5	3
TCJY227M006#0018E	Y	220	6.3	105	132	6	18	3200	2200	1400	–	3	3
TCJY227M006#0025E	Y	220	6.3	105	132	6	25	2700	1900	1200	–	2	3
TCJY227M006#0035E	Y	220	6.3	105	132	6	35	2300	1600	1000	–	2	3
TCJY227M006#0040E	Y	220	6.3	105	132	6	40	2200	1500	1000	–	2	3
TCJY227M006#0050E	Y	220	6.3	105	132	6	50	1900	1300	900	–	2	3
TCJD337M006#0012E	D	330	6.3	105	198	6	12	4300	3000	1900	–	3	3
TCJD337M006#0015E	D	330	6.3	105	198	6	15	3900	2700	1800	–	3	3
TCJD337M006#0018E	D	330	6.3	105	198	6	18	3500	2500	1600	–	3	3
TCJD337M006#0025E	D	330	6.3	105	198	6	25	3000	2100	1400	–	3	3
TCJD337M006#0040E	D	330	6.3	105	198	6	40	2400	1700	1100	–	2	3
TCJD337M006#0050E	D	330	6.3	105	198	6	50	2100	1500	900	–	2	3
TCJY337M006#0015E	Y	330	6.3	85	198	12	15	3500	2500	–	–	5	3
TCJY337M006#0025E	Y	330	6.3	105	198	10	25	2700	1900	1200	–	3	3
TCJY337M006#0040E	Y	330	6.3	105	198	12	40	2200	1500	1000	–	3	3
TCJY337M006#0050E	Y	330	6.3	105	198	12	50	1900	1300	900	–	3	3
TCJD477M006#0025E	D	470	6.3	105	282	6	25	3000	2100	1400	–	2	3
TCJD477M006#0045E	D	470	6.3	105	282	6	45	2200	1500	1000	-	2	3
TCJE477M006#0025E	E	470	6.3	125	296.1	10	25	3200	2200	1400	800	0	3
TCJE477M006#0050E	E	470	6.3	125	296.1	10	50	2200	1500	1000	600	0	3
TCJX477M006#0035E	X	470	6.3	105	282	6	35	2200	1500	1000	–	3	3
TCJX477M006#0050E	X	470	6.3	105	282	6	50	1900	1300	900	–	3	3
TCJX477M006#0100E	X	470	6.3	105	282	6	100	1300	900	600	–	3	3
TCJE687M006#0025E	E	680	6.3	125	428.4	10	25	3200	2200	1400	800	0	3
TCJE687M006#0050E	E	680	6.3	125	428.4	10	50	2200	1500	1000	600	0	3
10 Volt													
TCJK475M010#0300E	K	4.7	10	105	4.7	6	300	500	400	200	–	3	3
TCJK475M010#0500E	K	4.7	10	105	4.7	6	500	400	300	200	–	3	3
TCJR475M010#0500E	R	4.7	10	105	4.7	6	500	400	300	200	–	3	3
TCJA106M010#0200E	A	10	10	125	10	6	200	700	500	300	200	1	3

RATINGS & PART NUMBER REFERENCE

Part Number	Case Size	Capacitance (µF)	Rated Voltage (V)	Maximum Operating Temperature (°C)	DCL Max. (µA)	DF Max. (%)	ESR Max. @ 100kHz (mΩ)	100kHz RMS Current (mA)				Product Category	MSL
								45°C	85°C	105°C	125°C		
TCJA106M010#0300E	A	10	10	125	10	6	300	600	400	300	200	1	3
TCJA156M010#0200E	A	15	10	125	15	6	200	700	500	300	200	1	3
TCJB156M010#0100E	B	15	10	125	15	6	100	1100	800	500	300	0	3
TCJB156M010#0200E	B	15	10	125	15	6	200	800	600	400	200	0	3
TCJA226M010#0250E	A	22	10	125	22	8	250	600	400	300	200	1	3
TCJB226M010#0070E	B	22	10	125	22	6	70	1300	900	600	300	0	3
TCJB226M010#0300E	B	22	10	125	22	6	300	600	400	300	200	0	3
TCJT226M010#0070E	T	22	10	105	22	6	70	1200	800	500	–	3	3
TCJT226M010#0150E	T	22	10	105	22	6	150	800	600	400	–	3	3
TCJA336M010#0250E	A	33	10	125	33	8	250	600	400	300	200	1	3
TCJB336M010#0070E	B	33	10	125	33	6	70	1300	900	600	300	0	3
TCJB336M010#0200E	B	33	10	125	33	6	200	800	600	400	200	0	3
TCJC336M010#0100E	C	33	10	125	33	6	100	1300	900	600	300	1	3
TCJT336M010#0070E	T	33	10	105	33	6	70	1200	800	500	–	3	3
TCJT336M010#0150E	T	33	10	105	33	6	150	800	600	400	–	3	3
TCJB476M010#0070E	B	47	10	105	47	6	70	1300	900	600	–	3	3
TCJC476M010#0100E	C	47	10	125	47	6	100	1300	900	600	300	1	3
TCJH476M010#0100E	H	47	10	105	47	6	100	1000	700	500	–	3	3
TCJD686M010#0045E	D	68	10	125	68	6	45	2200	1500	1000	600	0	3
TCJD686M010#0055E	D	68	10	125	68	6	55	2000	1400	900	500	0	3
TCJY686M010#0045E	Y	68	10	105	68	6	45	2000	1400	900	–	3	3
TCJY686M010#0055E	Y	68	10	105	68	6	55	1800	1300	800	–	3	3
TCJD107M010#0018E	D	100	10	105	100	6	18	3500	2500	1600	–	2	3
TCJD107M010#0025E	D	100	10	105	100	6	25	3000	2100	1400	–	2	3
TCJD107M010#0045E	D	100	10	105	100	6	45	2200	1500	1000	–	3	3
TCJD107M010#0055E	D	100	10	105	100	6	55	2000	1400	900	–	3	3
TCJD107M010#0080E	D	100	10	105	100	6	80	1700	1200	800	–	3	3
TCJY107M010#0018E	Y	100	10	105	100	6	18	3200	2200	1400	–	2	3
TCJY107M010#0025E	Y	100	10	105	100	6	25	2700	1900	1200	–	2	3
TCJY107M010#0045E	Y	100	10	105	100	6	45	2000	1400	900	–	3	3
TCJY107M010#0055E	Y	100	10	105	100	6	55	1800	1300	800	–	3	3
TCJD157M010#0025E	D	150	10	105	150	6	25	3000	2100	1400	–	3	3
TCJD157M010#0040E	D	150	10	105	150	6	40	2400	1700	1100	–	3	3
TCJD157M010#0045E	D	150	10	105	150	6	45	2200	1500	1000	–	3	3
TCJD157M010#0055E	D	150	10	105	150	6	55	2000	1400	900	–	3	3
TCJY157M010#0025E	Y	150	10	105	150	6	25	2700	1900	1200	–	3	3
TCJY157M010#0040E	Y	150	10	105	150	6	40	2200	1500	1000	–	3	3
TCJY157M010#0045E	Y	150	10	105	150	6	45	2000	1400	900	–	3	3
TCJY157M010#0055E	Y	150	10	105	150	6	55	1800	1300	800	–	3	3
TCJD227M010#0015E	D	220	10	105	220	6	15	3900	2700	1800	–	3	3
TCJD227M010#0025E	D	220	10	105	220	6	25	3000	2100	1400	–	3	3
TCJD227M010#0040E	D	220	10	105	220	6	40	2400	1700	1100	–	3	3
TCJD227M010#0050E	D	220	10	105	220	6	50	2100	1500	900	–	3	3
TCJY227M010#0015E	Y	220	10	85	220	6	15	3500	2500	–	–	5	3
TCJY227M010#0025E	Y	220	10	105	220	6	25	2700	1900	1200	–	3	3
TCJY227M010#0040E	Y	220	10	105	220	6	40	2200	1500	1000	–	3	3
TCJY227M010#0050E	Y	220	10	105	220	6	50	1900	1300	900	–	3	3
TCJD337M010#0025E	D	330	10	105	330	6	25	3000	2100	1400	–	2	3
TCJE337M010#0025E	E	330	10	125	330	10	25	3200	2200	1400	800	0	3
TCJE337M010#0050E	E	330	10	125	330	10	50	2200	1500	1000	600	0	3
TCJ5337M010#0035E	5	330	10	105	330	10	35	2600	1800	1200	–	2	3
TCJ5337M010#0100E	5	330	10	105	330	10	100	1500	1100	700	–	2	3
TCJE477M010#0025E	E	470	10	125	470	10	25	3200	2200	1400	800	0	3
TCJE477M010#0050E	E	470	10	125	470	10	50	2200	1500	1000	600	0	3
16 Volt													
TCJA685M016#0200E	A	6.8	16	125	10.9	6	200	700	500	300	200	1	3
TCJA106M016#0200E	A	10	16	125	16	6	200	700	500	300	200	1	3
TCJB106M016#0100E	B	10	16	125	16	6	100	1100	800	500	300	1	3
TCJB106M016#0200E	B	10	16	125	16	6	200	800	600	400	200	1	3
TCJT106M016#0100E	T	10	16	125	16	6	100	1000	700	500	300	1	3
TCJT106M016#0150E	T	10	16	125	16	6	150	800	600	400	200	1	3
TCJT106M016#0200E	T	10	16	125	16	6	200	700	500	300	200	1	3
TCJA156M016#0250E	A	15	16	125	24	8	250	600	400	300	200	1	3
TCJB156M016#0090E	B	15	16	125	24	6	90	1200	800	500	300	0	3
TCJB156M016#0150E	B	15	16	125	24	6	150	900	600	400	200	0	3
TCJA226M016#0300E	A	22	16	105	35.2	10	300	600	400	300	–	3	3
TCJB226M016#0070E	B	22	16	125	35.2	8	70	1300	900	600	300	0	3
TCJB226M016#0150E	B	22	16	125	35.2	6	150	900	600	400	200	0	3
TCJA336M016#0200E	A	33	16	105	52.8	10	200	700	500	300	–	3	3
TCJB336M016#0090E	B	33	16	125	52.8	8	90	1200	800	500	300	0	3
TCJB336M016#0150E	B	33	16	125	52.8	8	150	900	600	400	200	0	3
TCJH336M016#0150E	H	33	16	105	52.8	6	150	800	600	400	–	3	3
TCJY336M016#0045E	Y	33	16	105	52.8	6	45	2000	1400	900	–	2	3
TCJY336M016#0060E	Y	33	16	105	52.8	6	60	1800	1300	800	–	2	3
TCJY336M016#0070E	Y	33	16	105	52.8	6	70	1600	1100	700	–	2	3
TCJD476M016#0045E	D	47	16	125	75.2	6	45	2200	1500	1000	600	0	3
TCJD476M016#0070E	D	47	16	125	75.2	6	70	1800	1300	800	500	0	3
TCJH476M016#0150E	H	47	16	105	75.2	6	150	800	600	400	–	3	4
TCJX476M016#0045E	X	47	16	105	75.2	6	45	2000	1400	900	–	2	3
TCJX476M016#0070E	X	47	16	105	75.2	6	70	1600	1100	700	–	2	3
TCJY476M016#0045E	Y	47	16	105	75.2	6	45	2000	1400	900	–	2	3
TCJY476M016#0070E	Y	47	16	105	75.2	6	70	1600	1100	700	–	2	3
TCJD686M016#0050E	D	68	16	105	108.8	6	50	2100	1500	900	–	2	3

The Important Information/Disclaimer is incorporated in the catalog where these specifications came from or available online at www.kyocera-avx.com/disclaimer/ by reference and should be reviewed in full before placing any order.

RATINGS & PART NUMBER REFERENCE

Part Number	Case Size	Capacitance (µF)	Rated Voltage (V)	Maximum Operating Temperature (°C)	DCL Max. (µA)	DF Max. (%)	ESR Max. @ 100kHz (mΩ)	100kHz RMS Current (mA)				Product Category	MSL
								45°C	85°C	105°C	125°C		
TCJY686M016#0050E	Y	68	16	105	108.8	6	50	1900	1300	900	–	2	3
TCJD107M016#0050E	D	100	16	105	160	6	50	2100	1500	900	–	2	3
TCJE107M016#0040E	E	100	16	105	160	6	40	2500	1800	1100	–	2	3
TCJY107M016#0050E	Y	100	16	105	160	6	50	2320	2320	580	–	2	3
TCJC157M016#0070E	C	150	16	125	240	10	70	1600	1100	700	400	0	3
TCJD157M016#0040E	D	150	16	105	240	6	40	2400	1700	1100	–	2	3
TCJD157M016#0050E	D	150	16	105	240	6	50	2100	1500	900	–	2	3
TCJD157M016#0070E	D	150	16	105	240	6	70	1800	1300	800	–	2	3
TCJE157M016#0025E	E	150	16	125	240	8	25	3200	2200	1400	800	0	3
TCJE157M016#0040E	E	150	16	125	240	10	40	2500	1800	1100	600	0	3
TCJY157M016#0040E	Y	150	16	105	240	6	40	2200	1500	1000	–	3	3
TCJY157M016#0050E	Y	150	16	105	240	6	50	1900	1300	900	–	3	3
TCJY157M016#0070E	Y	150	16	105	240	6	70	1600	1100	700	–	3	3
TCJD227M016#0035E	D	220	16	105	352	10	35	2500	1800	1100	–	2	3
TCJD227M016#0050E	D	220	16	105	352	10	50	2100	1500	900	–	2	3
TCJE227M016#0050E	E	220	16	125	352	10	50	2200	1500	1000	600	0	3
TCJE337M016#0035E	E	330	16	105	528	10	35	2700	1900	1200	–	2	3
TCJE337M016#0050E	E	330	16	105	528	10	50	2200	1500	1000	–	2	3
TCJE337M016#0070E	E	330	16	105	528	10	70	1900	1300	900	–	2	3
TCJU337M016R0050E	U	330	16	125	528	12	50	2800	2000	1300	700	1	3
TCJU337M016R0070E	U	330	16	125	528	12	70	2300	1600	1000	600	1	3
TCJ5337M016#0100E	5	330	16	105	528	10	100	1500	1100	700	–	2	3
TCJ5477M016R0100E	5	470	16	105	752	10	100	1500	1100	700	–	3	3
20 Volt													
TCJA685M020#0150E	A	6.8	20	125	13.6	6	150	800	600	400	200	1	3
TCJB685M020#0150E	B	6.8	20	105	13.6	8	150	900	600	400	–	3	3
TCJA106M020#0150E	A	10	20	125	20	6	150	800	600	400	200	1	3
TCJB106M020#0100E	B	10	20	125	20	8	100	1100	800	500	300	0	3
TCJB106M020#0150E	B	10	20	125	20	8	150	900	600	400	200	0	3
TCJB156M020#0090E	B	15	20	125	30	8	90	1200	800	500	300	0	3
TCJB156M020#0150E	B	15	20	125	30	8	150	900	600	400	200	0	3
TCJB226M020#0090E	B	22	20	105	44	6	90	1200	800	500	300	0	3
TCJB226M020#0150E	B	22	20	105	44	6	150	900	600	400	200	0	3
TCJX226M020#0100E	X	22	20	105	44	8	100	1300	900	600	–	2	3
TCJY226M020#0070E	Y	22	20	105	44	6	70	1600	1100	700	–	2	3
TCJX336M020#0100E	X	33	20	105	66	6	100	1300	900	600	–	2	3
TCJY336M020#0070E	Y	33	20	105	66	6	70	1600	1100	700	–	2	3
TCJD476M020#0055E	D	47	20	105	94	6	55	2000	1400	900	–	2	3
TCJX476M020#0055E	X	47	20	105	94	6	55	1800	1300	800	–	3	3
TCJX476M020#0070E	X	47	20	105	94	6	70	1600	1100	700	–	3	3
TCJY476M020#0070E	Y	47	20	125	94	6	70	1600	1100	700	400	0	3
TCJD686M020#0055E	D	68	20	105	136	6	55	2000	1400	900	–	3	3
TCJE686M020#0045E	E	68	20	105	136	6	45	2400	1700	1100	–	2	3
TCJY686M020#0050E	Y	68	20	105	136	6	50	1900	1300	900	–	2	3
TCJC107M020#0070E	C	100	20	125	200	10	70	1600	1100	700	400	0	3
TCJD107M020#0055E	D	100	20	105	200	6	55	2000	1400	900	–	2	3
TCJE107M020#0045E	E	100	20	125	200	10	45	2400	1700	1100	600	0	3
TCJY107M020#0055E	Y	100	20	105	200	6	55	1800	1300	800	–	2	3
TCJE157M020#0050E	E	150	20	125	300	6	50	2200	1500	1000	600	0	3
TCJU227M020R0070E	U	220	20	105	440	12	70	2300	1600	1000	–	2	3
25 Volt													
TCJP105M025#0500E	P	1.0	25	105	2.5	6	500	400	300	200	–	2	3
TCJA475M025#0500E	A	4.7	25	125	11.8	8	500	400	300	200	100	1	3
TCJB475M025#0100E	B	4.7	25	105	11.8	6	100	1100	800	500	–	3	3
TCJB475M025#0150E	B	4.7	25	105	11.8	6	150	900	600	400	–	3	3
TCJA685M025#0150E	A	6.8	25	105	17	6	150	800	600	400	–	3	3
TCJB685M025#0090E	B	6.8	25	105	17	6	90	1200	800	500	–	2	3
TCJB685M025#0150E	B	6.8	25	105	17	6	150	900	600	400	–	3	3
TCJT685M025#0100E	T	6.8	25	105	17	6	100	1000	700	500	–	3	3
TCJT685M025#0150E	T	6.8	25	105	17	6	150	800	600	400	–	3	3
TCJA106M025#0150E	A	10	25	105	25	6	150	800	600	400	–	2	3
TCJB106M025#0090E	B	10	25	105	25	6	90	1200	800	500	–	2	3
TCJB106M025#0100E	B	10	25	105	25	6	100	1100	800	500	–	2	3
TCJB106M025#0150E	B	10	25	105	25	6	150	900	600	400	–	2	3
TCJT106M025#0100E	T	10	25	105	25	8	100	1000	700	500	-	2	3
TCJB156M025#0100E	B	15	25	105	37.5	6	100	1400	1400	900	–	2	3
TCJB156M025#0150E	B	15	25	105	37.5	6	150	900	600	400	–	2	3
TCJY156M025#0090E	Y	15	25	105	37.5	6	90	1400	1000	600	–	2	3
TCJB226M025#0100E	B	22	25	105	55	6	100	1100	800	500	–	2	3
TCJB226M025#0150E	B	22	25	105	55	6	150	900	600	400	–	2	3
TCJC226M025#0100E	C	22	25	105	55	6	100	1300	900	600	–	3	3
TCJD226M025#0060E	D	22	25	105	55	6	60	1900	1300	900	–	2	3
TCJD226M025#0100E	D	22	25	105	55	6	100	1500	1100	700	–	2	3
TCJX226M025#0100E	X	22	25	105	55	8	100	1300	900	600	–	2	3
TCJY226M025#0070E	Y	22	25	105	55	6	70	1600	1100	700	–	3	3
TCJD336M025#0060E	D	33	25	105	82.5	6	60	1900	1300	900	–	2	3
TCJD336M025#0100E	D	33	25	105	82.5	6	100	1500	1100	700	–	2	3
TCJX336M025#0070E	X	33	25	105	82.5	6	70	1600	1100	700	–	2	3
TCJX336M025#0100E	X	33	25	105	82.5	6	100	1300	900	600	–	2	3
TCJY336M025#0040E	Y	33	25	105	82.5	6	40	2200	1500	1000	–	2	3
TCJY336M025#0060E	Y	33	25	105	82.5	6	60	1800	1300	800	–	2	3
TCJY336M025#0070E	Y	33	25	105	82.5	6	70	1600	1100	700	–	2	3
TCJY336M025#0100E	Y	33	25	105	82.5	6	100	1400	1000	600	–	2	3

The Important Information/Disclaimer is incorporated in the catalog where these specifications came from or available online at www.kyocera-avx.com/disclaimer/ by reference and should be reviewed in full before placing any order.

RATINGS & PART NUMBER REFERENCE

Part Number	Case Size	Capacitance (µF)	Rated Voltage (V)	Maximum Operating Temperature (°C)	DCL Max. (µA)	DF Max. (%)	ESR Max. @ 100kHz (mΩ)	100kHz RMS Current (mA)				Product Category	MSL
								45°C	85°C	105°C	125°C		
TCJD476M025#0060E	D	47	25	105	117.5	6	60	1900	1300	900	–	3	3
TCJD476M025#0100E	D	47	25	105	117.5	6	100	1500	1100	700	–	3	3
TCJE476M025#0050E	E	47	25	105	117.5	6	50	2200	1500	1000	–	3	3
TCJY476M025#0100E	Y	47	25	105	117.5	6	100	1400	1000	600	–	3	3
TCJD686M025#0070E	D	68	25	105	170	6	70	1800	1300	800	–	2	3
TCJE686M025#0050E	E	68	25	105	170	6	50	2200	1500	1000	–	3	3
TCJY686M025#0100E	Y	68	25	105	170	6	100	1400	1000	600	–	3	3
TCJD107M025#0055E	D	100	25	125	250	6	55	2000	1400	900	500	0	3
TCJD107M025#0070E	D	100	25	125	250	6	70	1800	1300	800	500	0	3
TCJE107M025#0040E	E	100	25	125	250	6	40	2500	1800	1100	600	0	3
TCJE107M025#0060E	E	100	25	125	250	6	60	2000	1400	900	500	0	3
TCJE107M025#0080E	E	100	25	125	250	6	80	1800	1300	800	500	0	3
TCJU107M025R0070E	U	100	25	125	250	12	70	2300	1600	1000	600	1	3
TCJU157M025R0070E	U	150	25	105	375	12	70	2300	1600	1000	–	2	3
35 Volt													
TCJB155M035#0200E	B	1.5	35	105	5.3	6	200	800	600	400	–	2	3
TCJB225M035#0200E	B	2.2	35	105	7.7	6	200	800	600	400	–	3	3
TCJA335M035#0500E	A	3.3	35	125	11.6	8	500	400	300	200	100	1	3
TCJB335M035#0200E	B	3.3	35	105	11.6	6	200	800	600	400	–	3	3
TCJB475M035#0150E	B	4.7	35	125	16.5	6	150	900	600	400	200	0	3
TCJB475M035#0200E	B	4.7	35	125	16.5	6	200	800	600	400	200	0	3
TCJC475M035#0200E	C	4.7	35	105	16.5	6	200	900	600	400	–	3	3
TCJC685M035#0200E	C	6.8	35	105	23.8	6	200	900	600	400	–	3	3
TCJB106M035#0150E	B	10	35	125	35	6	150	900	600	400	200	0	3
TCJB106M035#0200E	B	10	35	125	35	6	200	800	600	400	200	0	3
TCJC106M035#0200E	C	10	35	105	35	6	200	900	600	400	–	3	3
TCJY106M035#0070E	Y	10	35	105	35	6	70	1600	1100	700	–	2	3
TCJB156M035#0200E	B	15	35	105	52.5	6	200	800	600	400	–	2	3
TCJC156M035#0200E	C	15	35	105	52.5	6	200	900	600	400	–	3	3
TCJD156M035#0070E	D	15	35	105	52.5	6	70	1800	1300	800	–	3	3
TCJD156M035#0100E	D	15	35	105	52.5	6	100	1500	1100	700	–	3	3
TCJY156M035#0070E	Y	15	35	105	52.5	6	70	1600	1100	700	–	3	3
TCJY156M035#0100E	Y	15	35	105	52.5	6	100	1400	1000	600	–	3	3
TCJD226M035#0070E	D	22	35	105	77	6	70	1800	1300	800	–	2	3
TCJD226M035#0100E	D	22	35	105	77	6	100	1500	1100	700	–	2	3
TCJY226M035#0150E	Y	22	35	105	77	6	150	1100	800	500	–	3	3
TCJD336M035#0070E	D	33	35	125	115.5	6	70	1800	1300	800	500	0	3
TCJD336M035#0100E	D	33	35	125	115.5	6	100	1500	1100	700	400	0	3
TCJE336M035#0055E	E	33	35	105	115.5	6	55	2100	1500	900	–	3	3
TCJE336M035#0070E	E	33	35	105	115.5	6	70	1900	1300	900	–	3	3
TCJU336M035R0070E	U	33	35	125	115.5	12	70	2300	1600	1000	600	1	3
TCJY336M035#0100E	Y	33	35	105	115.5	6	100	1400	1000	600	–	3	3
TCJE476M035#0055E	E	47	35	105	164.5	6	55	2100	1500	900	–	2	3
TCJU476M035R0070E	U	47	35	125	164.5	12	70	2300	1600	1000	600	1	3
TCJY476M035#0100E	Y	47	35	105	164.5	6	100	1400	1000	600	–	3	3
TCJU157M035#0100E	U	150	35	105	525	10	100	1900	1300	900	–	2	3
50 Volt													
TCJB684M050#0400E	B	0.68	50	105	3.4	6	400	600	400	300	–	3	3
TCJB105M050#0300E	B	1.0	50	105	5	6	300	600	400	300	–	3	3
TCJB155M050#0300E	B	1.5	50	105	7.5	6	300	600	400	300	–	3	3
TCJC155M050#0300E	C	1.5	50	105	7.5	6	300	800	600	400	–	3	3
TCJB225M050#0300E	B	2.2	50	125	11	8	300	600	400	300	200	0	3
TCJC225M050#0300E	C	2.2	50	105	11	6	300	800	600	400	–	3	3
TCJB335M050#0300E	B	3.3	50	125	16.5	8	300	600	400	300	200	0	3
TCJC335M050#0200E	C	3.3	50	105	16.5	8	200	900	600	400	–	3	3
TCJC475M050#0200E	C	4.7	50	105	23.5	8	200	900	600	400	–	3	3
TCJX475M050#0250E	X	4.7	50	105	23.5	6	250	800	600	400	–	2	5
TCJY475M050#0250E	Y	4.7	50	105	23.5	6	250	900	600	400	–	2	3
TCJC685M050#0200E	C	6.8	50	105	34	8	200	900	600	400	–	3	3
TCJD685M050#0120E	D	6.8	50	105	34	10	120	1400	1000	600	–	3	3
TCJD106M050#0090E	D	10	50	105	50	10	90	1600	1100	700	–	3	3
TCJD106M050#0120E	D	10	50	105	50	10	120	1400	1000	600	–	3	3
TCJE106M050#0070E	E	10	50	105	50	6	70	1900	1300	900	–	3	3
TCJE106M050#0100E	E	10	50	105	50	6	100	1600	1100	700	–	3	3
TCJD156M050#0150E	D	15	50	125	75	8	150	1200	800	500	300	1	3
TCJE156M050#0070E	E	15	50	105	75	6	70	1900	1300	900	–	3	3
TCJE156M050#0100E	E	15	50	105	75	6	100	1600	1100	700	–	3	3
TCJD226M050#0090E	D	22	50	125	110	8	90	1600	1100	700	400	1	3
TCJE226M050#0075E	E	22	50	125	110	8	75	1800	1300	800	500	1	3
TCJE226M050#0150E	E	22	50	105	110	8	150	1300	900	600	–	2	3
63 Volt													
TCJB474M063#0400E	B	0.47	63	105	3	8	400	600	400	300	–	3	3
TCJB684M063#0300E	B	0.68	63	105	4.3	8	300	600	400	300	–	3	3
TCJB105M063#0300E	B	1.0	63	105	6.3	8	300	600	400	300	–	3	3
TCJC105M063#0300E	C	1.0	63	105	6.3	6	300	800	600	400	–	3	3
TCJC155M063#0300E	C	1.5	63	105	9.5	6	300	800	600	400	–	3	3
TCJC225M063#0200E	C	2.2	63	105	13.9	6	200	900	600	400	–	3	3
TCJC335M063#0200E	C	3.3	63	105	20.8	6	200	900	600	400	–	3	3
TCJC475M063#0200E	C	4.7	63	105	29.6	6	200	900	600	400	–	3	3
TCJD475M063#0120E	D	4.7	63	105	29.6	6	120	1400	1000	600	–	3	3
TCJD685M063#0120E	D	6.8	63	105	42.8	6	120	1400	1000	600	–	3	3
TCJE685M063#0100E	E	6.8	63	105	42.8	6	100	1600	1100	700	–	3	3
TCJE685M063#0150E	E	6.8	63	105	42.8	6	150	1300	900	600	–	3	3

The Important Information/Disclaimer is incorporated in the catalog where these specifications came from or available online at www.kyocera-avx.com/disclaimer/ by reference and should be reviewed in full before placing any order.

RATINGS & PART NUMBER REFERENCE

Part Number	Case Size	Capacitance (µF)	Rated Voltage (V)	Maximum Operating Temperature (°C)	DCL Max. (µA)	DF Max. (%)	ESR Max. @ 100kHz (mΩ)	100kHz RMS Current (mA)				Product Category	MSL
								45°C	85°C	105°C	125°C		
TCJE106M063#0100E	E	10	63	105	63	6	100	1600	1100	700	–	3	3
TCJE106M063#0150E	E	10	63	105	63	6	150	1300	900	600	–	3	3
TCJE156M063#0150E	E	15	63	105	94.5	8	150	1300	900	600	–	2	3
75 Volt													
TCJD475M075#0150E	D	4.7	75	105	35.3	6	150	1200	800	500	–	3	3
TCJD685M075#0120E	D	6.8	75	105	51	6	120	1400	1000	600	–	3	3
100 Volt													
TCJD475M100#0250E	D	4.7	100	105	47	8	250	900	600	400	–	4	3
125 Volt													
TCJD335M125#0250E	D	3.3	125	105	41.2	8	250	900	600	400	–	4	3

Moisture Sensitivity Level (MSL) is defined according to J-STD-020. All technical data relates to an ambient temperature of +25°C. Capacitance and DF are measured at 120Hz, 0.5RMS with DC bias of 2.2 volts. DCL is measured at rated voltage after 5 minutes. ESR allowed to move up to 1.25 times catalog limit post mounting. For typical weight and composition see page 253.

NOTE: KYOCERA AVX reserves the right to supply higher voltage ratings or tighter tolerance part in the same case size, to the same reliability standards.

RECOMMENDED DERATING FACTOR

Voltage and temperature derating as percentage of Vr

Product Category 0

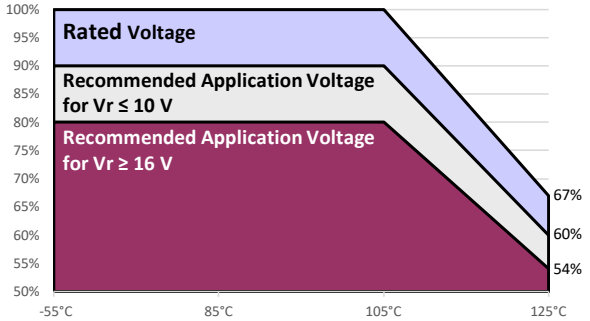

Product Category 1

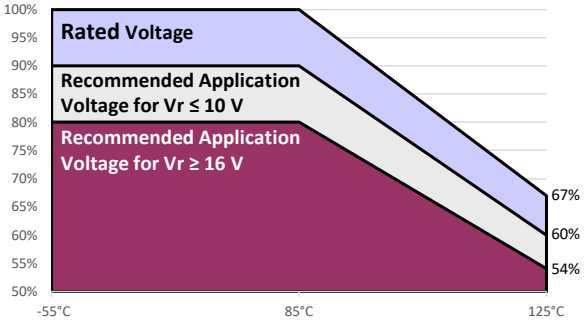

Product Category 2

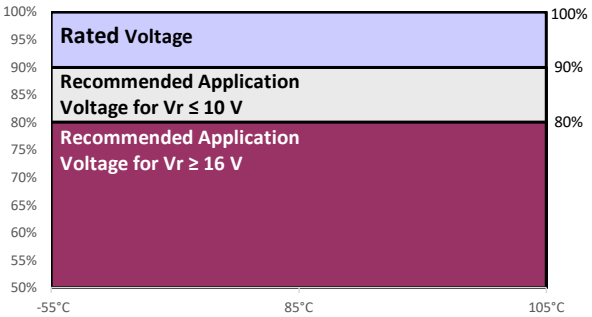

Product Category 3, 4

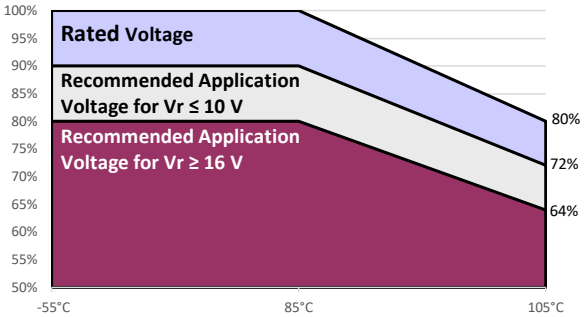

Product Category 5

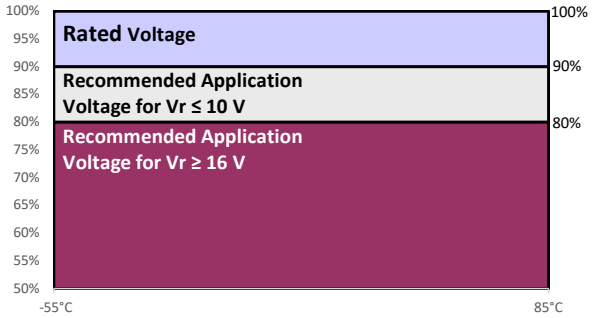

The Important Information/Disclaimer is incorporated in the catalog where these specifications came from or available online at www.kyocera-avx.com/disclaimer/ by reference and should be reviewed in full before placing any order.

PRODUCT CATEGORY 0, 1 (TEMPERATURE RANGE -55°C TO +125°C)

TEST	Condition	Characteristics	
Endurance	Apply rated voltage (Ur) at 85ºC (CATEGORY 1) or 105ºC (CATEGORY 0) or 2/3 rated voltage (Ur) at 125ºC (all CATEGORIES) for 2000 hours through a circuit impedance of ≤0.1Ω/V. Stabilize at room temperature for 1-2 hours before measuring.	**Visual examination**	no visible damage
		DCL	1.25 x initial limit
		ΔC/C	within +10/-20% of initial value
		DF	1.5 x initial limit
		ESR	2 x initial limit
Storage Life	Store at 125ºC, no voltage applied, for 2000 hours. Stabilize at room temperature for 1-2 hours before measuring.	**Visual examination**	no visible damage
		DCL	2 x initial limit
		ΔC/C	within +10/-20% of initial value
		DF	1.5 x initial limit
		ESR	2 x initial limit
Humidity	Store at 65ºC and 95% relative humidity fo 500 hours, with no applied voltage. Stabilize at room temperature and humidity for 1-2 hours before measuring.	**Visual examination**	no visible damage
		DCL	3 x initial limit
		ΔC/C	within +35/-5% of initial value
		DF	1.5 x initial limit
		ESR	2 x initial limit

Temperature Stability

Step	Temperature °C	Duration (min)
1	+20	15
2	-55	15
3	+20	15
4	+85	15
5	+125	15
6	+20	15

	+20ºC	-55ºC	+20ºC	+85ºC	+125ºC	+20ºC
DCL	IL*	n/a	IL*	10 x IL*	12.5 x IL*	IL*
ΔC/C	n/a	+0/-20%	±5%	+20/-0%	+30/-0%	±5%
DF	IL*	1.5 x IL*	IL*	1.5 x IL*	2 x IL*	IL*

Surge Voltage	Apply 1.3x 2/3x rated voltage (Ur) at 125ºC for 1000 cycles of duration 6 min (30 sec charge, 5 min 30 sec discharge) through a charge / discharge resistance of 1000Ω	**Visual examination**	no visible damage
		DCL	initial limit
		ΔC/C	within +10/-20% of initial value
		DF	1.25 x initial limit
Mechanical Shock	MIL-STD-202, Method 213, Condition C	**Visual examination**	no visible damage
		DCL	initial limit
		ΔC/C	within ±5% of initial value
		DF	initial limit
		ESR	1.25 x initial limit
Vibration	MIL-STD-202, Method 204, Condition D	**Visual examination**	no visible damage
		DCL	initial limit
		ΔC/C	within ±5% of initial value
		DF	initial limit
		ESR	1.25 x initial limit

*Initial Limit
Initial measurement max. 1hr after the removal from dry pack or after pretreatment at 85°C for 24 hours.

The Important Information/Disclaimer is incorporated in the catalog where these specifications came from or available online at www.kyocera-avx.com/disclaimer/ by reference and should be reviewed in full before placing any order.

PRODUCT CATEGORY 2, 3, 4 (TEMPERATURE RANGE -55°C TO +105°C)

TEST	Condition	Characteristics	
Endurance	Apply rated voltage (Ur) at 85ºC for 2000 hours through a circuit impedance of ≤0.1Ω/V (all CATEGORIES). And/or apply rated voltage (Ur) (CATEGORY 2) or 0.8x rated voltage (CATEGORY 3, 4) at 105°C for 2000 hours through a circuit impedance of ≤0.1Ω/V Always stabilize at room temperature for 1-2 hours before measuring.	**Visual examination**	no visible damage
		DCL	1.25 x initial limit
		ΔC/C	within +10/-20% of initial value
		DF	1.5 x initial limit
		ESR	2 x initial limit
Storage Life	Store at 105ºC, no voltage applied, for 2000 hours. Stabilize at room temperature for 1-2 hours before measuring.	**Visual examination**	no visible damage
		DCL (V_R ≤ 75V)	1.25 x initial limit
		DCL (V_R > 75V)	2 x initial limit
		ΔC/C	within +10/-20% of initial value
		DF	1.5 x initial limit
		ESR	2 x initial limit
Humidity	Store at 65ºC and 95% relative humidity for 500 hours, with no applied voltage. Stabilize at room temperature and humidity for 1-2 hours before measuring.	**Visual examination**	no visible damage
		DCL	3 x initial limit
		ΔC/C	within +35/-5% of initial value
		DF	1.5 x initial limit
		ESR	2 x initial limit

Temperature Stability	Step	Temperature °C	Duration (min)
	1	+20	15
	2	-55	15
	3	+20	15
	4	+85	15
	5	+105	15
	6	+20	15

	+20ºC	-55ºC	+20ºC	+85ºC	+105ºC	+20ºC
DCL	IL*	n/a	IL*	10 x IL*	12.5 x IL*	IL*
ΔC/C	n/a	+0/-20%	±5%	+20/-0%	+30/-0%	±5%
DF	IL*	1.5 x IL*	IL*	1.5 x IL*	2 x IL*	IL*

Surge Voltage	Apply 1.3x rated voltage (Ur) at 105ºC for CATEGORY 2, or apply 1.3x 0.8x rated voltage (Ur) at 105ºC for CATEGORY 3, 4 for 1000 cycles of duration 6 min (30 sec charge, 5 min 30 sec discharge) through a charge / discharge resistance of 1000Ω	**Visual examination**	no visible damage
		DCL	initial limit
		ΔC/C	within +10/-20% of initial value
		DF	1.25 x initial limit
Mechanical Shock	MIL-STD-202, Method 213, Condition C	**Visual examination**	no visible damage
		DCL	initial limit
		ΔC/C	within ±5% of initial value
		DF	initial limit
		ESR	1.25 x initial limit
Vibration	MIL-STD-202, Method 204, Condition D	**Visual examination**	no visible damage
		DCL	initial limit
		ΔC/C	within ±5% of initial value
		DF	initial limit
		ESR	1.25 x initial limit

*Initial Limit
Initial measurement max. 1hr after the removal from dry pack or after pretreatment at 85°C for 24 hours.

The Important Information/Disclaimer is incorporated in the catalog where these specifications came from or available online at www.kyocera-avx.com/disclaimer/ by reference and should be reviewed in full before placing any order.

PRODUCT CATEGORY 5 (TEMPERATURE RANGE -55°C TO +85°C)

TEST	Condition	Characteristics	
Endurance	Apply rated voltage (Ur) at 85ºC for 2000 hours through a circuit impedance of ≤0.1Ω/V. Stabilize at room temperature for 1-2 hours before measuring.	**Visual examination**	no visible damage
		DCL	1.25 x initial limit
		ΔC/C	within +10/-20% of initial value
		DF	1.5 x initial limit
		ESR	2 x initial limit
Storage Life	Store at 85ºC, no voltage applied, for 2000 hours. Stabilize at room temperature for 1-2 hours before measuring.	**Visual examination**	no visible damage
		DCL	1.25 x initial limit
		ΔC/C	within +10/-20% of initial value
		DF	1.5 x initial limit
		ESR	2 x initial limit
Humidity	Store at 65ºC and 95% relative humidity for 500 hours, with no applied voltage. Stabilize at room temperature and humidity for 1-2 hours before measuring.	**Visual examination**	no visible damage
		DCL	5 x initial limit
		ΔC/C	within +35/-5% of initial value
		DF	1.5 x initial limit
		ESR	2 x initial limit

Temperature Stability

Step	Temperature°C	Duration(min)
1	+20	15
2	-55	15
3	+20	15
4	+85	15
5	+125	15

	+20ºC	-55ºC	+20ºC	+85ºC	+20ºC
DCL	IL*	n/a	IL*	10 x IL*	IL*
ΔC/C	n/a	+0/-20%	±5%	+20/-0%	±5%
DF	IL*	1.5 x IL*	IL*	1.5 x IL*	IL*

TEST	Condition	Characteristics	
Surge Voltage	Apply 1.3x rated voltage (Ur) at 85ºC for 1000 cycles of duration 6 min (30 sec charge, 5 min 30 sec discharge) through a charge / discharge resistance of 1000Ω	**Visual examination**	no visible damage
		DCL	initial limit
		ΔC/C	within +10/-20% of initial value
		DF	1.25 x initial limit
Mechanical Shock	MIL-STD-202, Method 213, Condition C	**Visual examination**	no visible damage
		DCL	initial limit
		ΔC/C	within ±5% of initial value
		DF	initial limit
		ESR	1.25 x initial limit
Vibration	MIL-STD-202, Method 204, Condition D	**Visual examination**	no visible damage
		DCL	initial limit
		ΔC/C	within ±5% of initial value
		DF	initial limit
		ESR	1.25 x initial limit

*Initial Limit
Initial measurement max. 1hr after the removal from dry pack or after pretreatment at 85°C for 24 hours.

SOLID ELECTROLYTIC CAPACITOR ROADMAP

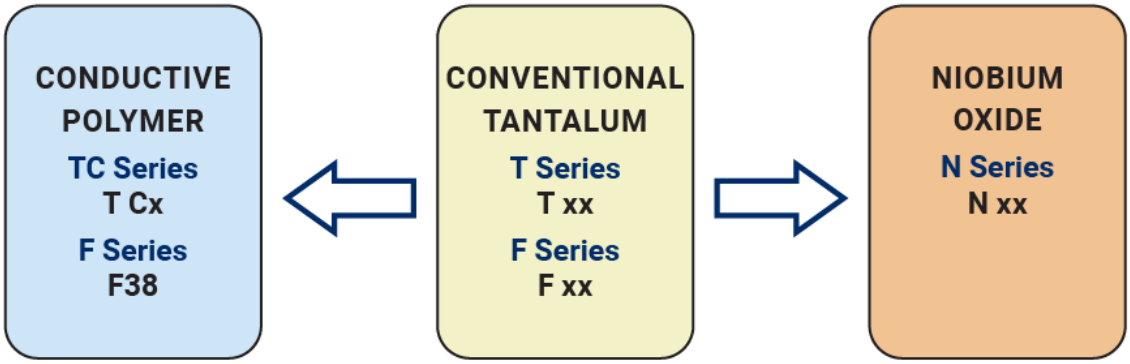

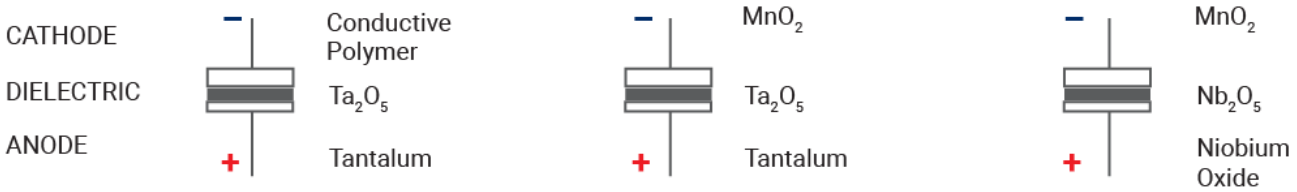

FIVE CAPACITOR CONSTRUCTION STYLES

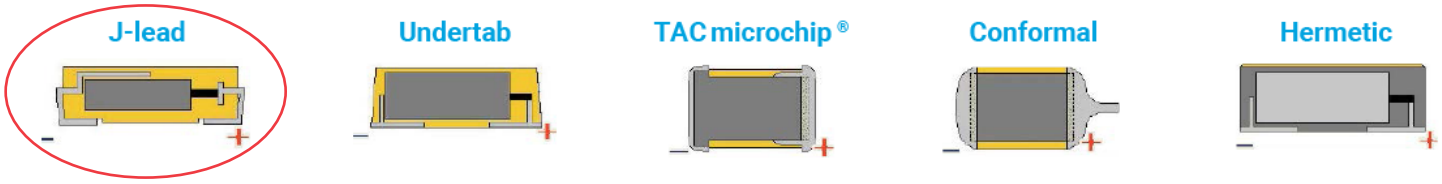

SERIES LINE UP : Conductive Polymer

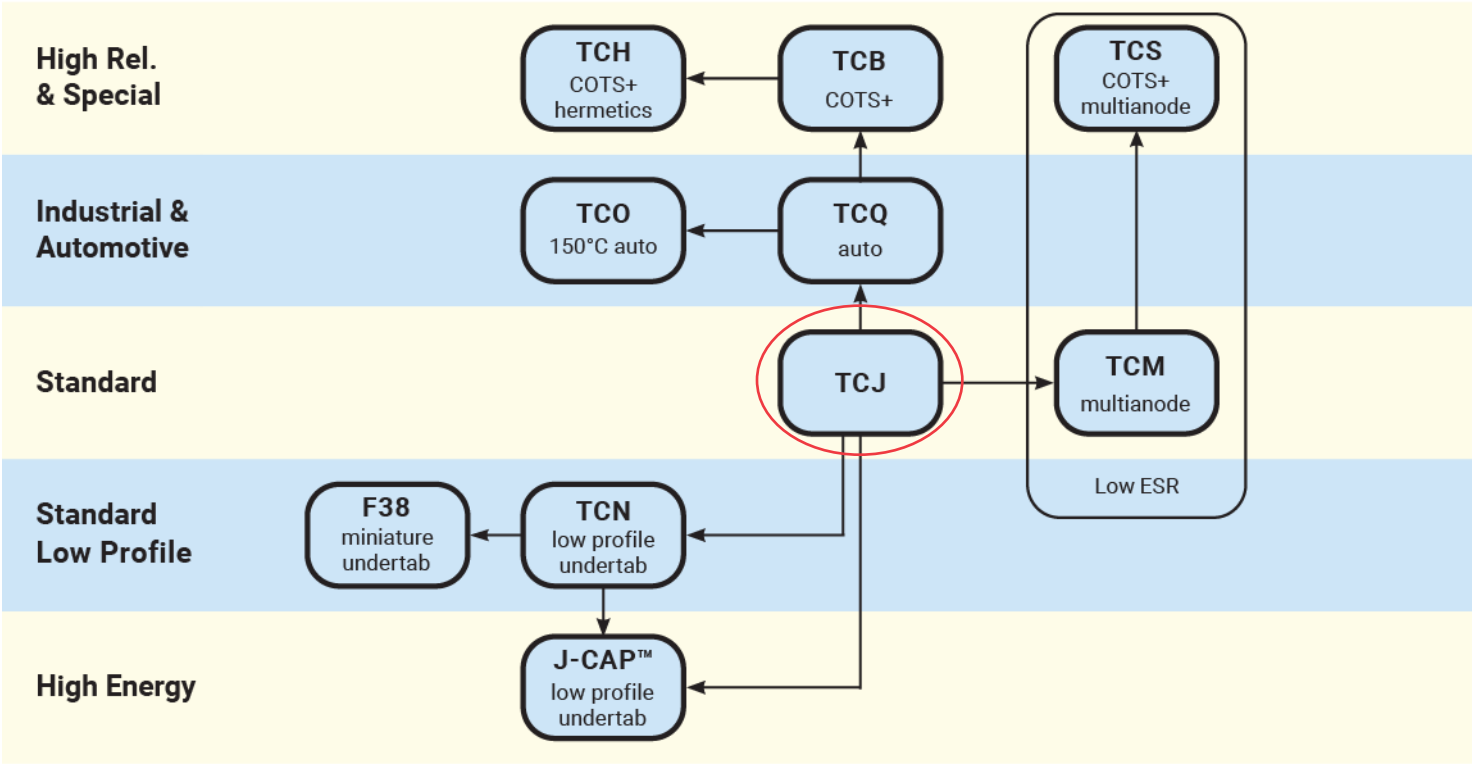

The Important Information/Disclaimer is incorporated in the catalog where these specifications came from or available online at www.kyocera-avx.com/disclaimer/ by reference and should be reviewed in full before placing any order.